Work Order ID 58875

Wednesday, May 19, 2010 9:47:47 AM

Item ID: D4021-3 **Accept** **Setup Start**

Revision ID:

Item Name: Data Plate **Stop**

Start Date: 5/19/2010 **Start Qty:** 2.00 **Cust Item ID:**

Required Date: 6/22/2010 **Req'd Qty:** 2.00 **Customer:**

Reference:

Approvals: **Process Plan:** N **Date:** 10-5-19 **Tooling:** _____ **Date:** _____ **Run Start**

QC: _____ **Date:** _____ **SPC (Y/N):** _____ **Date:** _____ **Stop**

Sequence ID/ Work Center ID	Operation Description	Set Up/ Run Hours	Draw Number	Draw Rev.	Plan Code	Accept Qty	Reject Qty	Reject Number	Insp. Stamp
Draw Nbr / **Revision Nbr**									
D4021 / B									
100		0.00							
Shear	**Memo**	0.00				2			
Shear	1-Cut as per dwg D4021 2- break sharp corner as per dwg D4021 3-Deburr as required	SAD 10-05-25							
120	QC5- Inspect part completeness to step on W/O	0.00							
QC	**Memo**	0.00				+2			
Quality Control									

Dart Aerospace Ltd

W/O:		WORK ORDER CHANGES					
DATE	STEP	PROCEDURE CHANGE	By	Date	Qty	Approval Chief Eng / Prod Mgr	Approval QC Inspector

Part No: _____ PAR #: _____ Fault Category: _____ NCR: Yes No DQA: _____ Date: _____

Resolution: _____ Disposition: _____ QA: N/C Closed: _____ Date: _____

NCR:		WORK ORDER NON-CONFORMANCE (NCR)						
DATE	STEP	Description of NC Section A	Corrective Action Section B			Verification Section C	Approval Chief Eng	Approval QC Inspector
			Initial Chief Eng	Action Description Chief Eng	Sign & Date			

NOTE: Date & initial all entries

H:\fFORMS\Quality Assurance\approved QA\NCRWO RevE

Work Order ID 58875

Wednesday, May 19, 2010 9:47:47 AM

Item ID: D4021-3 **Accept** **Setup Start**

Revision ID:

Item Name: Data Plate **Stop**

Start Date: 5/19/2010 **Start Qty:** 2.00 **Cust Item ID:**

Required Date: 6/22/2010 **Req'd Qty:** 2.00 **Customer:**

Reference:

Approvals: **Process Plan:** _____ **Date:** _____ **Tooling:** _____ **Date:** _____ **Run Start**

QC: _____ **Date:** _____ **SPC (Y/N):** _____ **Date:** _____ **Stop**

Sequence ID/ Work Center ID	Operation Description	Set Up/ Run Hours	Draw Number	Draw Rev.	Plan Code	Accept Qty	Reject Qty	Reject Number	Insp. Stamp
130	Bend as per dwg	0.00							
Brake NC	Memo	0.00	SD 10/05/25			2			
Brake NC									
140	QC5- Inspect part completeness to step on W/O	0.00							
QC	Memo	0.00	S 10/05/25			+2			
Quality Control									
150	Identify as per dwg & Stock Location: WA	0.00							
Packaging	Memo	0.00	SAD 10-05-25			2			
Packaging									

Dart Aerospace Ltd

W/O:		WORK ORDER CHANGES					
DATE	STEP	PROCEDURE CHANGE	By	Date	Qty	Approval Chief Eng / Prod Mgr	Approval QC Inspector

Part No: _____ **PAR #:** _____ **Fault Category:** _____ **NCR:** Yes No **DQA:** _____ **Date:** _____

Resolution: _____ **Disposition:** _____ **QA: N/C Closed:** _____ **Date:** _____

NCR:		WORK ORDER NON-CONFORMANCE (NCR)						
DATE	STEP	Description of NC Section A	Corrective Action Section B			Verification Section C	Approval Chief Eng	Approval QC Inspector
			Initial Chief Eng	Action Description Chief Eng	Sign & Date			

NOTE: Date & initial all entries

H:\FORMS\Quality Assurance\approved QA\NCRWO RevE

Work Order ID 58875

Wednesday, May 19, 2010 9:47:47 AM

Item ID: D4021-3
Revision ID:
Item Name: Data Plate

Accept

Setup Start
Stop

Start Date: 5/19/2010 **Start Qty:** 2.00
Required Date: 6/22/2010 **Req'd Qty:** 2.00
Reference:

Cust Item ID:
Customer:

Approvals: **Process Plan:** _____ **Date:** _____ **Tooling:** _____ **Date:** _____
QC: _____ **Date:** _____ **SPC (Y/N):** _____ **Date:** _____

Run Start
Stop

Sequence ID/ Work Center ID	Operation Description	Set Up/ Run Hours	Draw Number	Draw Rev.	Plan Code	Accept Qty	Reject Qty	Reject Number	Insp. Stamp
160	QC21- Final Inspection - Work Order Release	0.00							
QC	**Memo**	0.00					10/05/26		
Quality Control									

CL 10/5/26

Dart Aerospace Ltd

W/O:		WORK ORDER CHANGES					
DATE	STEP	PROCEDURE CHANGE	By	Date	Qty	Approval Chief Eng / Prod Mgr	Approval QC Inspector

Part No: _____ PAR #: _____ Fault Category: _____ NCR: Yes No DQA: _____ Date: _____

Resolution: _____ Disposition: _____ QA: N/C Closed: _____ Date: _____

NCR:		WORK ORDER NON-CONFORMANCE (NCR)						
DATE	STEP	Description of NC Section A	Corrective Action Section B			Verification Section C	Approval Chief Eng	Approval QC Inspector
			Initial Chief Eng	Action Description Chief Eng	Sign & Date			

NOTE: Date & initial all entries

H:\fFORMS\Quality Assurance\approved QA\NCRWO RevE

Picklist Print

Wednesday, May 19, 2010 9:47:51 AM

Work Order ID: 58875

Parent Item: D4021-3

Parent Item Name: Data Plate

Comments: IPP RevA: new issue DD 09.11.25 verified by:EC IPP RevB: new part DD 09.12.03 verified by:EC IPP Rev:C as per dwg REV.A DD 10.02.22 verified by:EC IPP Rev:D as per dwg revB DD 10.04.20 verified by:EC

Start Date: 5/19/2010 **Required Date:** 6/22/2010

Start Qty: 2.00 **Required Qty:** 2.00

M304S20GA	Purchased	No	100	sf	185.3814	0.1944

304/316 .040 Sheet

SAD 10-052-25

Location		Loc Qty	Loc Code
MAT		180.7278	
	114574	180.7278	
MAT20		4.6536	
	112885	3.1363	0.1944 x2
	113062	1.5173	

Dart Aerospace Ltd

W/O:		WORK ORDER CHANGES					
DATE	STEP	PROCEDURE CHANGE	By	Date	Qty	Approval Chief Eng / Prod Mgr	Approval QC Inspector

Part No: _____ **PAR #:** _____ **Fault Category:** _____ **NCR:** Yes No **DQA:** _____ **Date:** _____

Resolution: _____ **Disposition:** _____ **QA: N/C Closed:** _____ **Date:** _____

NCR:		WORK ORDER NON-CONFORMANCE (NCR)						
DATE	STEP	Description of NC Section A	Corrective Action Section B			Verification Section C	Approval Chief Eng	Approval QC Inspector
			Initial Chief Eng	Action Description Chief Eng	Sign & Date			

NOTE: Date & initial all entries

H:\fFORMS\Quality Assurance\approved QA\NCRWO RevE

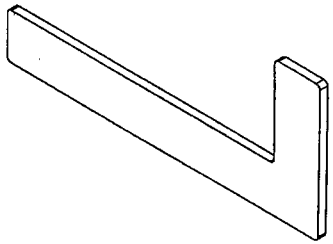

D4021-1 HANDLE PLATE

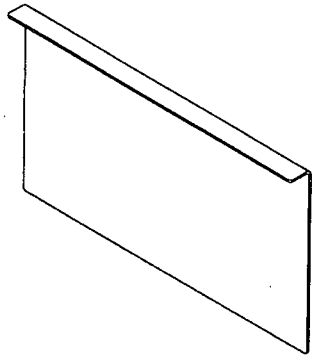

D4021-3 DATA PLATE

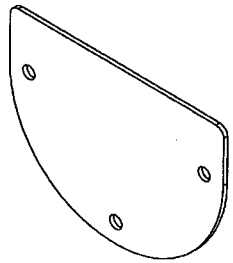

D4021-5 BLANKING PLATE

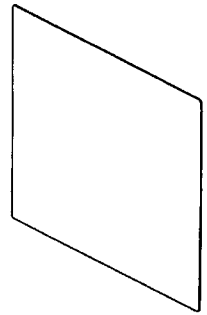

D4021-11 INSTRUCTIONS PLATE

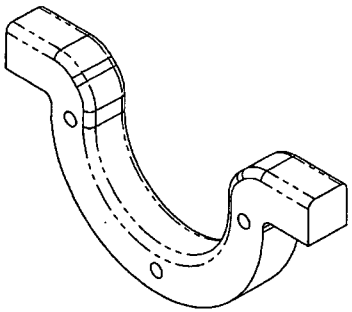

D4021-7 HOOP

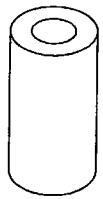

D4021-9 BUSHING

SHOP COPY
RETURN TO
ENGINEERING
UNCONTROLLED COPY
SUBJECT TO AMENDMENT
WITHOUT NOTICE
WORK ORDER
NO. 58875
BS 10-5-19

RELEASED
2010 -04- 14

REV.	DESCRIPTION	BY	DATE
B	POWDER COAT SPEC ADDED TO NOTE 2 (A8-2)	JPH	10.04.06
A	NEW ISSUE	JPH	10.01.29

DESIGN	AJS	DART AEROSPACE LTD HAWKESBURY, ONTARIO, CANADA
DRAWN	JPH	
CHECKED		DRAWING NO. D4021 — REV. B — SHEET 1 OF 3
MFG. APPR.		
APPROVED		TITLE: MISC PARTS - 350 BASKET — SCALE: NTS
DE APPR.		
DATE	10.04.06	

Dart Aerospace Ltd

W/O:		WORK ORDER CHANGES					
DATE	STEP	PROCEDURE CHANGE	By	Date	Qty	Approval Chief Eng / Prod Mgr	Approval QC Inspector

Part No: _____ PAR #: _____ Fault Category: _____ NCR: Yes No DQA: _____ Date: _____

Resolution: _____ Disposition: _____ QA: N/C Closed: _____ Date: _____

NCR:		WORK ORDER NON-CONFORMANCE (NCR)						
DATE	STEP	Description of NC Section A	Corrective Action Section B			Verification Section C	Approval Chief Eng	Approval QC Inspector
			Initial Chief Eng	Action Description Chief Eng	Sign & Date			

NOTE: Date & initial all entries

H:\FORMS\Quality Assurance\approved QA\NCRWO RevE

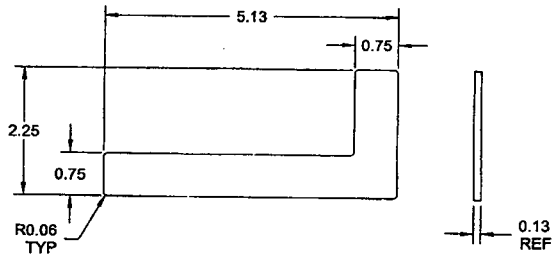

D4021-1 HANDLE PLATE

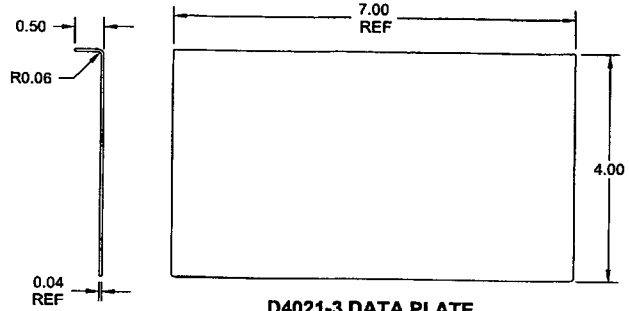

D4021-3 DATA PLATE
MAKE FROM D4021-3F

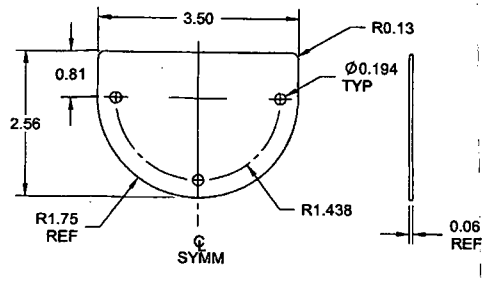

D4021-5 BLANKING PLATE

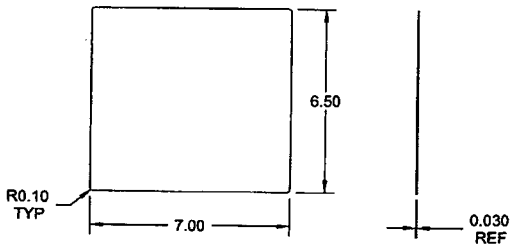

D4021-11 INSTRUCTIONS PLATE

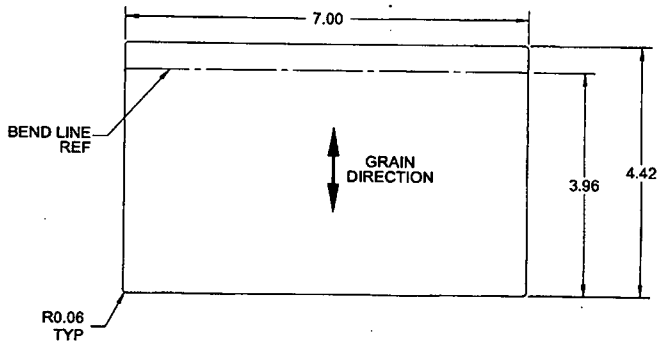

D4021-3F DATA PLATE
FLAT PATTERN

NOTES:
1) MATERIAL -1: 304/316 STAINLESS STEEL SHEET ANNEALED 2B FINISH, PER MIL-S-5059 OR AMS 5513/5524 OR ASTM A240 OR ASME SA240 REF DART SPEC M304S11GA

-3F: 304/316 STAINLESS STEEL SHEET ANNEALED 2B FINISH, PER MIL-S-5059 OR AMS 5513/5524 OR ASTM A240 OR ASME SA240 REF DART SPEC M304S20GA

-5: 303/304/316 STAINLESS STEEL SHEET ANNEALED 2B FINISH, PER MIL-S-5059 OR AMS 5513/5524 OR ASTM A240 OR ASME SA240 REF DART SPEC M303S16GA OR M304S16GA

-11: 304/316 STAINLESS STEEL SHEET ANNEALED 2B FINISH, PER MIL-S-5059 OR AMS 5513/5524 OR ASTM A240 OR ASME SA240 REF DART SPEC M304S22GA

B 2) FINISH : -1/-3/-11: NONE
-5: POWDER COAT WHITE (4.3.5.2) PER DART QSI 005 4.3
3) TOLERANCES: PER DART QSI 018 UNLESS OTHERWISE NOTED
4) UNITS: INCHES UNLESS OTHERWISE NOTED
5) BREAK SHARP EDGES: 0.005 TO 0.010 MAX
6) IDENTIFICATION: N/A
7) WEIGHT -1: 0.18 lbs -3: 0.35 lbs
-5: 0.14 lbs -11: 0.39 lbs

RELEASED
2010 -04- 14
NP

W/O 58875

DESIGN	AJS	**DART AEROSPACE LTD** HAWKESBURY, ONTARIO, CANADA
DRAWN	JPH	
CHECKED		DRAWING NO. D4021 — REV. B — SHEET 2 OF 3
MFG. APPR.		
APPROVED		TITLE: MISC PARTS - 350 BASKET — SCALE: NTS
DE APPR.		
DATE	10.04.06	

Dart Aerospace Ltd

W/O:		WORK ORDER CHANGES					
DATE	STEP	PROCEDURE CHANGE	By	Date	Qty	Approval Chief Eng / Prod Mgr	Approval QC Inspector

Part No: _____ PAR #: _____ Fault Category: _____ NCR: Yes No DQA: _____ Date: _____

Resolution: _____ Disposition: _____ QA: N/C Closed: _____ Date: _____

NCR:		WORK ORDER NON-CONFORMANCE (NCR)						
DATE	STEP	Description of NC Section A	Corrective Action Section B			Verification Section C	Approval Chief Eng	Approval QC Inspector
			Initial Chief Eng	Action Description Chief Eng	Sign & Date			

NOTE: Date & initial all entries

H:\fFORMS\Quality Assurance\approved QA\NCRWO RevE

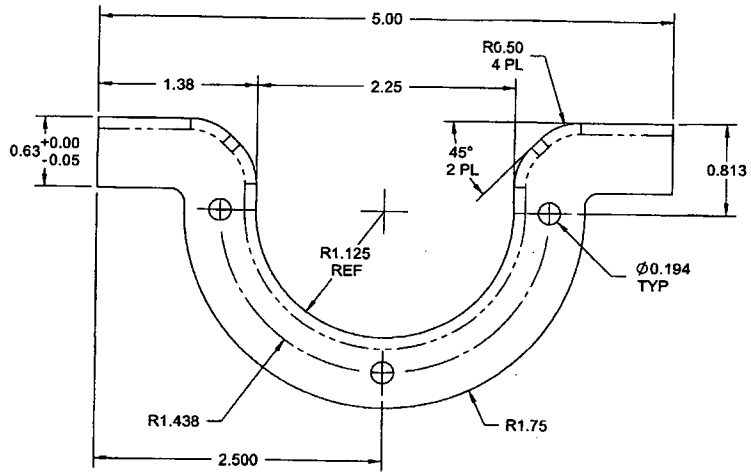

D4021-7 HOOP

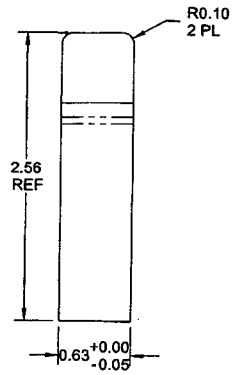

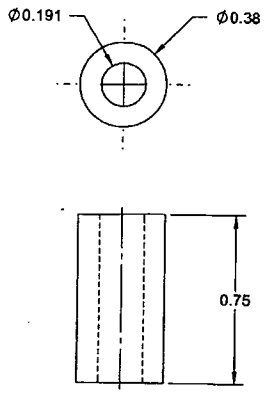

D4021-9 BUSHING

w/o 58875

RELEASED
2010 -04- 14
MP

NOTES:
1) MATERIAL-7: 304/316 STAINLESS STEEL BAR, PER ASTM A276
REF DART SPEC M304B

-9: 304/316 STAINLESS STEEL ROUND BAR, PER ASTM A276
REF DART SPEC M304R
2) FINISH: NONE
3) TOLERANCES: PER DART QSI 018 UNLESS OTHERWISE NOTED
4) UNITS: INCHES UNLESS OTHERWISE NOTED
5) BREAK SHARP EDGES: 0.005 TO 0.010 MAX
6) IDENTIFICATION: N/A
7) WEIGHT -7: 0.80 lbs
-9: 0.02 lbs

DESIGN	AJS	DART AEROSPACE LTD HAWKESBURY, ONTARIO, CANADA
DRAWN	JPH	
CHECKED		DRAWING NO. D4021 — REV. B — SHEET 3 OF 3
MFG. APPR.		
APPROVED		TITLE: MISC PARTS - 350 BASKET — SCALE: NTS
DE APPR.		
DATE	10.04.06	

Dart Aerospace Ltd

W/O:		WORK ORDER CHANGES					
DATE	STEP	PROCEDURE CHANGE	By	Date	Qty	Approval Chief Eng / Prod Mgr	Approval QC Inspector

Part No: _____ PAR #: _____ Fault Category: _____ NCR: Yes No DQA: _____ Date: _____

Resolution: _____ Disposition: _____ QA: N/C Closed: _____ Date: _____

NCR:		WORK ORDER NON-CONFORMANCE (NCR)						
DATE	STEP	Description of NC Section A	Corrective Action Section B			Verification Section C	Approval Chief Eng	Approval QC Inspector
			Initial Chief Eng	Action Description Chief Eng	Sign & Date			

NOTE: Date & initial all entries

H:\fFORMS\Quality Assurance\approved QA\NCRWO RevE